Samba™ PLC+HMI User Guide

SM35-J-R20/SM43-J-R20 SM70-J-R20	▪ **12 Digital Inputs, include 1 HSC/Shaft-encoder Input, 2 Analog inputs (only when the digital inputs are set to pnp)** ▪ **8 Relay Outputs**
SM35-J-T20/SM43-J-R20 SM70-J-T20	▪ **12 Digital Inputs, include 3 HSC/Shaft-encoder Input, 2 Analog inputs** ▪ **8 Relay Outputs**

General Description

All of the controllers covered in this guide are micro-PLC+HMI, rugged programmable logic controllers that comprise built-in operating panels and on-board I/Os.

Item	**SM35-J-R20 SM35-J-T20**	**SM43-J-R20 SM43-J-T20**	**SM70-J-R20 SM70-J-T20**
On-board I/O	Model Dependent		
Screen	3.5" Color Touch	4.3" Color Touch	7" Color Touch
Keypad or Function Keys	None		
Programming Com Port, Built-in			
RS232	Yes	None	None
USB device, mini-B	None	Yes	Yes
Com Ports, separate order, user-installed	The user may install a CANbus module (V100-17-CAN), and **one** of the following: • RS232/RS485 port (V100-17-RS4/V100-17-RS4X) • Ethernet (V100-17-ET2)		

Standard Kit Contents

Item	**SM35-J-R20 SM35-J-T20**	**SM43-J-R20 SM43-J-T20**	**SM70-J-R20 SM70-J-T20**
Controller	Yes		
Terminal Blocks	Yes		
Battery	Yes (installed)	Yes (installed)	Yes
Mounting Brackets	Yes (2 parts)	Yes (4 parts)	Yes (6 parts)
Rubber Seal	Yes		

Alert Symbols and General Restrictions

When any of the following symbols appear, read the associated information carefully.

Symbol	Meaning	Description
	Danger	The identified danger causes physical and property damage.
	Warning	The identified danger could cause physical and property damage.
Caution	Caution	Use caution.

- Before using this product, the user must read and understand this document.
- All examples and diagrams are intended to aid understanding, and do not guarantee operation. Unitronics accepts no responsibility for actual use of this product based on these examples.
- Please dispose of this product according to local and national standards and regulations.
- Only qualified service personnel should open this device or carry out repairs.

Failure to comply with appropriate safety guidelines can cause severe injury or property damage.

- Do not attempt to use this device with parameters that exceed permissible levels.
- To avoid damaging the system, do not connect/disconnect the device when power is on.

Environmental Considerations

- Do not install in areas with: excessive or conductive dust, corrosive or flammable gas, moisture or rain, excessive heat, regular impact shocks or excessive vibration, in accordance with the standards given in the product's technical specification sheet.
- Do not place in water or let water leak onto the unit.
- Do not allow debris to fall inside the unit during installation.

- Ventilation: 10mm space required between controller's top/bottom edges & enclosure walls.
- Install at maximum distance from high-voltage cables and power equipment.

UL Compliance

The following section is relevant to Unitronics' products that are listed with the UL.

The following models: V130-33-R34, V130-J-R34, V130-T4-ZK1, V350-35-RA22, V350-J-RA22, V350-35-R34, V350-J-R34, V430-J-R34, SM35-J-T20, SM43-J-T20 are UL listed for Hazardous Locations.

The following models: V130-33-B1, V130-J-B1, V130-33-TA24, V130-J-TA24, V130-33-T38,V130-J-T38

V130-33-TR20, V130-J-TR20, V130-33-TR34, V130-J-TR34, V130-33-RA22, V130-J-RA22, V130-33-TRA22, V130-J-TRA22, V130-33-T2, V130-J-T2, V130-33-TR6, V130-J-TR6, V130-33-R34, V350-35-B1, V130-T4-ZK1, V350-J-B1, V350-35-TA24, V350-J-TA24, V350-35-T38, V350-J-T38, V350-35-TR20, V350-J-TR20, V350-35-TR34, V350-J-TR34, V350-35-TRA22, V350-J-TRA22, V350-35-T2, V350-J-T2, V350-35-TR6, V350-J-TR6, V350-S-TA24, V350-JS-TA24, V350-35-RA22, V350-J-RA22, V350-35-R34, V430-J-B1, V430-J-TA24, V430-J-T38, V430-J-R34, V430-J-RH2, V430-J-TR34, V430-J-RA22, V430-J-TRA22, V430-J-T2, V430-J-RH6, SM35-J-D4, SM35-J-R20 SM35-J-RA22, SM35-J-TA22, SM43-J-R20, SM43-J-RA22, SM43-J-TA22, SM35-J-T20, SM43-J-T20 SM70-J-R20, SM70-J-RA22, SM70-J-T20, SM70-J-T38, SM70-J-TA22, SM70-J-TRA22 are UL listed for Ordinary Location.

For models from series V130, V130-J, V430, that include "T4" or "J4" in the Model name, Suitable for mounting on the flat surface of Type 4X enclosure.
For examples: V130-T4-R34, V130-J4-R34, V430-J4-T2, SM43-J4-R20.

UL Ordinary Location

In order to meet the UL ordinary location standard, panel-mount this device on the flat surface of Type 1 or 4 X enclosures

UL Ratings, Programmable Controllers for Use in Hazardous Locations, Class I, Division 2, Groups A, B, C and D

These Release Notes relate to all Unitronics products that bear the UL symbols used to mark products that have been approved for use in hazardous locations, Class I, Division 2, Groups A, B, C and D.

Caution

- This equipment is suitable for use in Class I, Division 2, Groups A, B, C and D, or Non-hazardous locations only.
- Input and output wiring must be in accordance with Class I, Division 2 wiring methods and in accordance with the authority having jurisdiction.
- WARNING—Explosion Hazard—substitution of components may impair suitability for Class I, Division 2.
- WARNING – EXPLOSION HAZARD – Do not connect or disconnect equipment unless power has been switched off or the area is known to be non-hazardous.
- WARNING – Exposure to some chemicals may degrade the sealing properties of material used in Relays.
- This equipment must be installed using wiring methods as required for Class I, Division 2 as per the NEC and/or CEC.

Panel-Mounting

For programmable controllers that can be mounted also on panel, in order to meet the UL Haz Loc standard, panel-mount this device on the flat surface of Type 1 or Type 4X enclosures.

Relay Output Resistance Ratings

The products listed below contain relay outputs:

Programmable controllers, Models: V430-J-R34, V130-33-R34, V130-J-R34 and V350-35-R34, V350-J-R34

- When these specific products are used in hazardous locations, they are rated at 3A res.
- Except for models V430-J-R34, V130-33-R34, V130-J-R34, V130-T4-ZK1 and V350-35-R34, V350-J-R34, when these specific products are used in non-hazardous environmental conditions, they are rated at 5A res, as given in the product's specifications.

Communication and Removable Memory Storage

When products comprise either USB communication port, SD card slot, or both, neither the SD card slot nor the USB port are intended to be permanently connected, while the USB port is intended for programming only.

Removing / Replacing the battery

When a product has been installed with a battery, do not remove or replace the battery unless the power has been switched off, or the area is known to be non-hazardous.

Please note that it is recommended to back up all data retained in RAM, in order to avoid losing data when changing the battery while the power is switched off. Date and time information will also need to be reset after the procedure.

UL des zones ordinaires:

Pour respecter la norme UL des zones ordinaires, monter l'appareil sur une surface plane de type de protection 1 ou 4X

Certification UL des automates programmables, pour une utilisation en environnement à risques, Class I, Division 2, Groups A, B, C et D.

Cette note fait référence à tous les produits Unitronics portant le symbole UL - produits qui ont été certifiés pour une utilisation dans des endroits dangereux, Classe I, Division 2, Groupes A, B, C et D.

Attention

- Cet équipement est adapté pour une utilisation en Classe I, Division 2, Groupes A, B, C et D, ou dans Non-dangereux endroits seulement.
- Le câblage des entrées/sorties doit être en accord avec les méthodes de câblage selon la Classe I, Division 2 et en accord avec l'autorité compétente.
- AVERTISSEMENT: Risque d'Explosion – Le remplacement de certains composants rend caduque la certification du produit selon la Classe I, Division 2.
- AVERTISSEMENT - DANGER D'EXPLOSION - Ne connecter pas ou ne débranche pas l'équipement sans avoir préalablement coupé l'alimentation électrique ou la zone est reconnue pour être non dangereuse.
- AVERTISSEMENT - L'exposition à certains produits chimiques peut dégrader les propriétés des matériaux utilisés pour l'étanchéité dans les relais.
- Cet équipement doit être installé utilisant des méthodes de câblage suivant la norme Class I, Division 2 NEC et /ou CEC.

Montage de l'écran:

Pour les automates programmables qui peuvent aussi être monté sur l'écran, pour pouvoir être au standard UL, l'écran doit être monté dans un coffret avec une surface plane de type 1 ou de type 4X.

Certification de la résistance des sorties relais

Les produits énumérés ci-dessous contiennent des sorties relais:

- Automates programmables, modèles : V430-J-R34, V130-33-R34,V130-J-R34 and V350-35-R34,V350-J-R34
- Lorsque ces produits spécifiques sont utilisés dans des endroits dangereux, ils supportent un courant de 3A charge résistive.
- Excepté les modèles: V430-J-R34, V130-33-R34, V130-J-R34, V130-T4-ZK1 et V350-35-R34, V350-J-R34 lorsque ces produits spécifiques sont utilisés dans un environnement non dangereux, ils sont évalués à 5A res, comme indiqué dans les specifications du produit Plages de températures

Communication et de stockage amovible de mémoire (carte mémoire)

Produits comprend un port USB de communication, soit un port carte SD ou les deux, ni le port SD, ni le port USB ne sont censés être utilisés en permanence, tandis que l'USB est destiné à la programmation uniquement.

Retrait / Remplacement de la batterie

Lorsqu'un produit a été installé avec une batterie, retirez et remplacez la batterie seulement si l'alimentation est éteinte ou si l'environnement n'est pas dangereux.

Veuillez noter qu'il est recommandé de sauvegarder toutes les données conservées dans la RAM, afin d'éviter de perdre des données lors du changement de la batterie lorsque l'alimentation est coupée. Les informations sur la date et l'heure devront également être réinitialisées après la procédure

Mounting

Dimensions

SM35-J-R20/SM35-J-T20

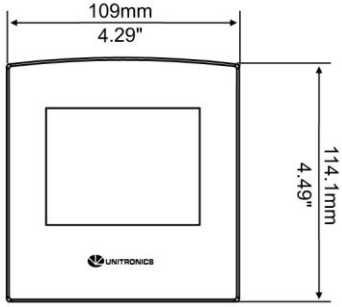

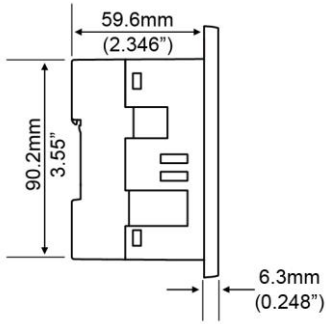

SM43-J-R20/SM43-J-T20

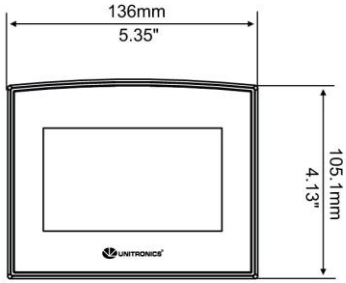

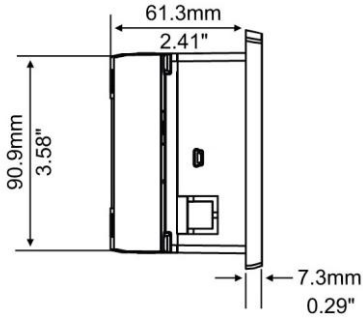

SM70-J-R20/SM70-J-T20

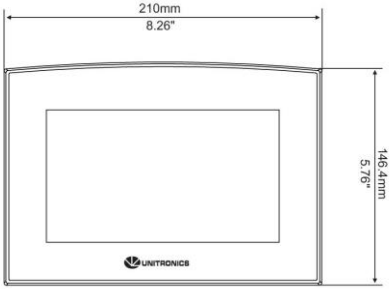

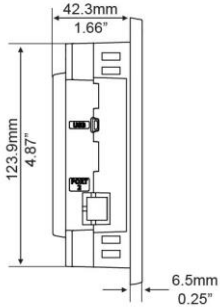

Panel Mounting

Before you begin, note that the mounting panel cannot be more than 5 mm thick.

UL listed models:
To meet the UL508 standard, panel-mount the device on the flat surface of a Type 1 enclosure.

1. Make a panel cut-out of the appropriate size:
   - SM35: 92x92mm (3.622”x3.622”).
   - SM43: 122.5x91.5mm (4.82”x3.6”).
   - SM70: 193x125mm (7.59”x4.92”).
2. Slide the controller into the cut-out, ensuring that the rubber seal is in place.
3. Push the mounting brackets into their slots on the sides of the panel as shown in the figure below.
4. Tighten the bracket’s screws against the panel. Hold the bracket securely against the unit while tightening the screw. The torque required is 0.35 N·m (3.1 in-lb).
5. When properly mounted, the controller is squarely situated in the panel cut-out as shown in the accompanying figures.

SM35

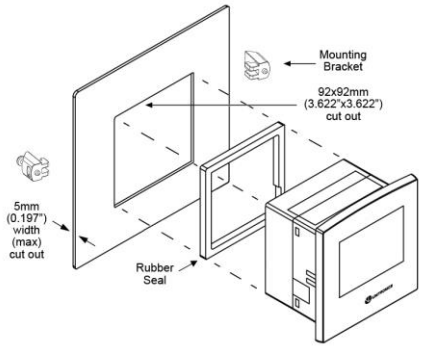

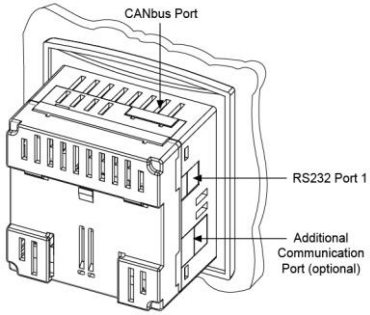

SM43

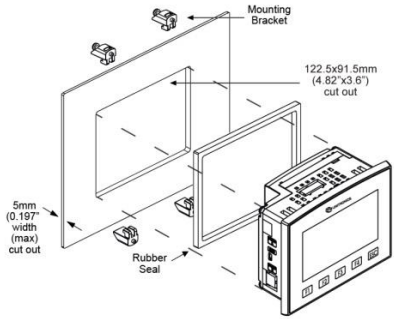

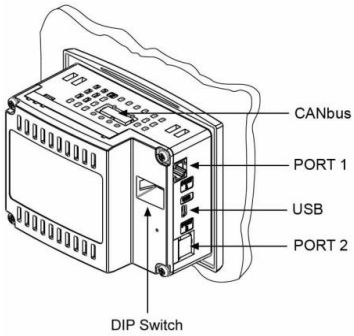

SM70

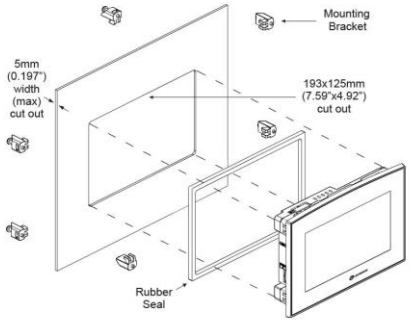

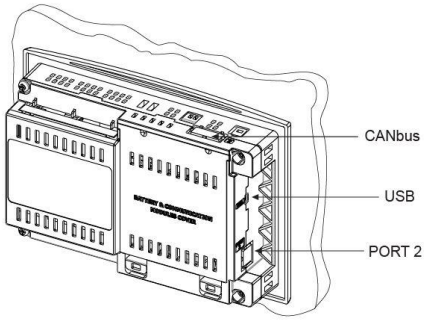

Caution	▪ Do not apply torque exceeding 0.35 N·m (3.1 in-lb) of torque to tighten the ▪ bracket screws. Using excessive force to tighten the screw can damage this product.

Wiring

⚡	▪ Do not touch live wires.
⚠	▪ Install an external circuit breaker. Guard against short-circuiting in external wiring. ▪ Use appropriate circuit protection devices. ▪ Unused pins should not be connected. Ignoring this directive may damage the device. ▪ Double-check all wiring before turning on the power supply.
Caution	▪ To avoid damaging the wire, do not exceed a maximum torque of 0.5 N·m (5 kgf·cm). ▪ Do not use tin, solder, or any substance on stripped wire that might cause the wire strand to break. ▪ Install at maximum distance from high-voltage cables and power equipment.

Wiring Procedure

Use crimp terminals for wiring; use 3.31 mm² –0.13 mm² wire (12-26 AWG):

1. Strip the wire to a length of 7±0.5mm (0.270–0.300“).
2. Unscrew the terminal to its widest position before inserting a wire.
3. Insert the wire completely into the terminal to ensure a proper connection.
4. Tighten enough to keep the wire from pulling free.

- Input or output cables should not be run through the same multi-core cable or share the same wire.
- Allow for voltage drop and noise interference with I/O lines used over an extended distance. Use wire that is properly sized for the load.
- The controller and I/O signals must be connected to the same 0V signal.

I/Os

SM35/43/70-J-R20 comprises a total of 12 inputs and 8 relays.
Input functionality can be adapted as follows:

12 inputs may be used as digital inputs. They may be wired in a group via a single jumper as either npn or pnp.

According to jumper settings and appropriate wiring:

- Inputs 5 and 6 can function as either digital or analog inputs.
  - If the digital inputs function as npn, analog option is not available.
- Input 0 can function as a high-speed counter, as part of a shaft-encoder, or as a normal digital input.
- Input 1 can function as either a counter reset, normal digital input, or as part of a shaft-encoder.
- If input 0 is set as a high-speed counter (without reset), input 1 can function as a normal digital input.

SM35/43/70-J-T20 comprises a total of 12 inputs and 8 transistor outputs.
Input functionality can be adapted as follows:

12 inputs may be used as digital inputs. They may be wired in a group via a single jumper as either npn or pnp.

According to jumper settings and appropriate wiring:

- Inputs 10 and 11 can function as either digital or analog inputs.
- Inputs 0, 2, and 4 can function as high-speed counters, as part of a shaft-encoder, or as normal digital inputs.
- Inputs 1, 3, and 5 can function as either counter reset, as part of a shaft-encoder, or as normal digital inputs.
- If inputs 0, 2, 4 are set as high-speed counters (without reset), inputs 1, 3, 5 can function as normal digital inputs.
- Outputs 0 to 6 can be used as PWM outputs.

Input and Output Jumper Settings

The tables below show how to set a specific jumper to change input functionality. To access the I/O jumpers, you must open the controller according to the instructions on page 11.

⚠ ▪ Incompatible jumper settings and wiring connections may seriously damage the controller.

SM35/43/70-J-R20

Digital Inputs 0-11: Set Type		
Set to	**JP12 (all Inputs)**	
npn (sink)	A	
pnp (source)*	B	
Input 5: Set Type - Digital or Analog #1		
Set to	**JP4**	**JP10**
Digital*	A	A
Voltage	B	A
Current	B	B
Input 6: Set Type - Digital or Analog #0		
Set to	**JP8**	**JP9**
Digital*	A	A
Voltage	B	A
Current	B	B

*Default settings

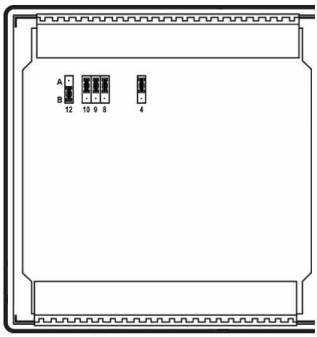

SM35/43/70-J-T20

⚠ Do not move JP2.

Digital Inputs 0-11: Set Type		
Set to	**JP1 (all Inputs)**	
npn (sink)	A	
pnp(source)*	B	
Inputs 10/11: Set as Digital or Analog		
Set to	**JP5 (Input 10)**	**JP6 (Input 11)**
Digital*	A	A
Analog	B	B
Analog Inputs AN0/AN1: Set Type		
Set to	**JP3 (AN0)**	**JP4 (AN1)**
Voltage*	A	A
Current	B	B

*Default settings

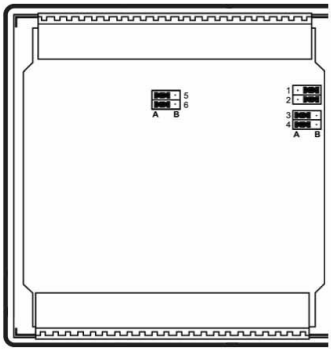

I/O Wiring

npn Input Wiring

SM35/43/70-J-R20

Input wiring, npn (sink)

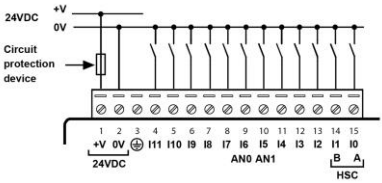

SM35/43/70-J-T20

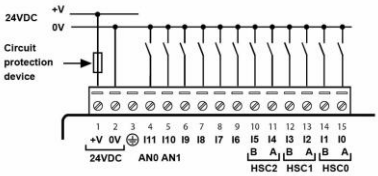

HSC input wiring, npn (sink)

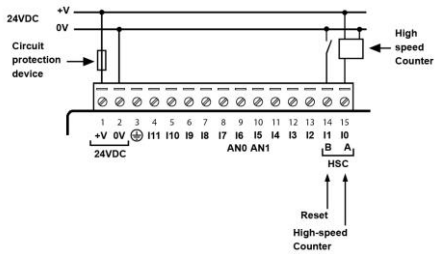

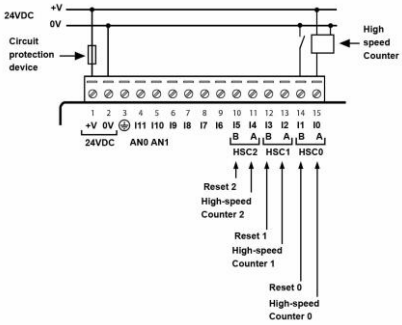

pnp Input Wiring

SM35/43/70-J-R20

Input wiring, pnp (source)

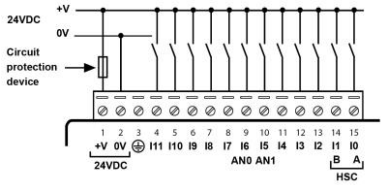

SM35/43/70-J-T20

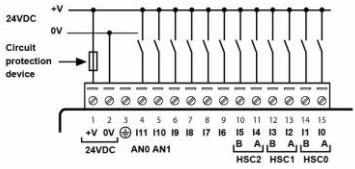

HSC input wiring, pnp (source)

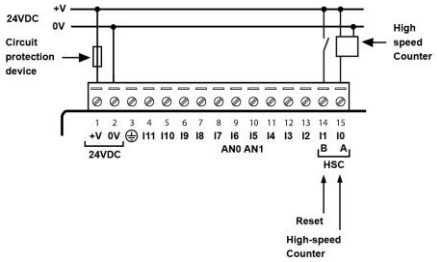

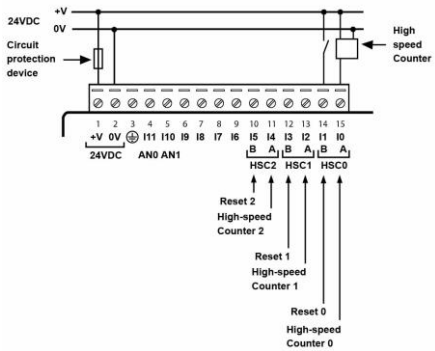

Shaft-encoder

SM35/43/70-J-R20

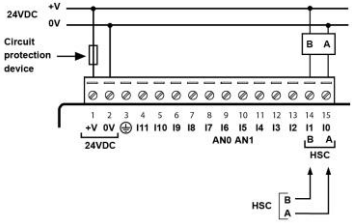

SM35/43/70-J-T20

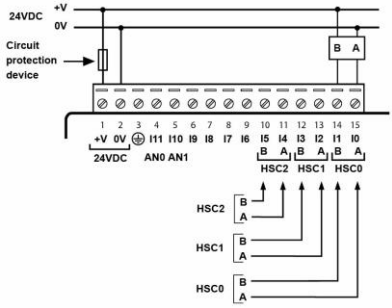

Analog Input Wiring

SM35/43/70-J-R20 **SM35/43/70-J-T20**

Analog input wiring, current (2/3 wire)

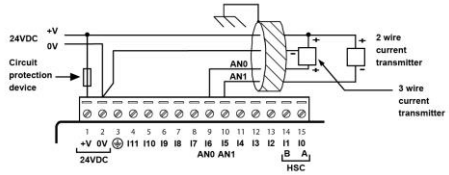

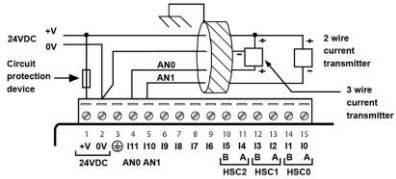

Analog input wiring, current (4-wire), voltage

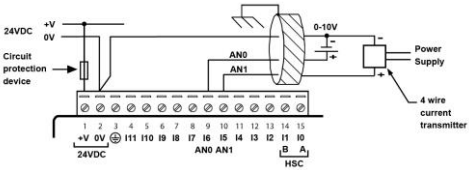

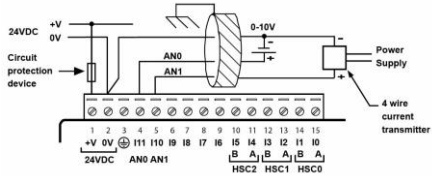

- Shields should be connected at the signal's source.
- The 0V signal of the analog input must be connected to the controller's 0V.

Relay Outputs

SM35/43/70-J-R20

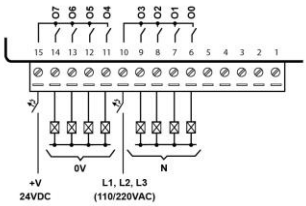

Transistor Outputs

SM35/43/70-J-T20

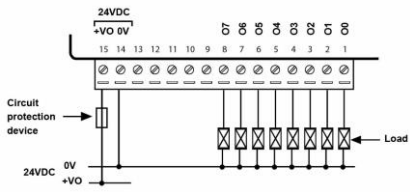

Increasing Contact Life Span

SM35/43/70-J-R20- Only

To increase the life span of the relay output contacts and protect the device from potential damage by reverse EMF, connect:

- A clamping diode in parallel with each inductive DC load
- An RC snubber circuit in parallel with each inductive AC load

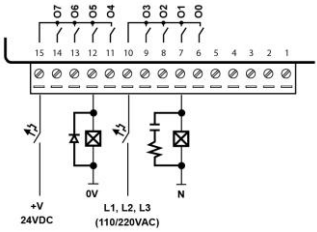

Power Supply

The controller requires an external 24VDC power supply.

Note: Photo is for illustration purposes only.

1. The power supply must include double insulation. Outputs must be rated as SELV/PELV/Class 2/Limited Power.
2. Use separate wires to connect the functional earth line (pin 3) and the 0V line (pin 2) to the system earth ground.
3. Install an external circuit breaker. Guard against short-circuiting in external wiring.
4. Double-check all wiring before turning on the power supply.
5. Do not connect either the 'Neutral' or 'Line' signal of the 110/220VAC to device's 0V pin.
6. In the event of voltage fluctuations or non-conformity to voltage power supply specifications, connect the device to a regulated power supply.

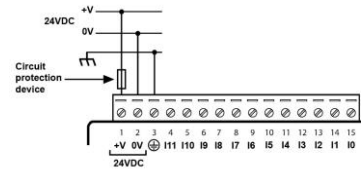

Earthing the PLC+HMI

To maximize system performance, avoid electromagnetic interference by:

- Mounting the controller on a metal panel.
- Connect each common and ground connection directly to the earth ground of your system.

For ground wiring use the shortest and thickest possible wire.

Communication Port

Caution

- Turn off power before making communications connections.
- Always use the appropriate port adapters.

SM43/SM70-J-R20,SM43/SM70-J-T20

This series comprises a USB port.

Caution

- The USB port in SM43 Series is not isolated. Make sure that the PC and the controller are grounded to same potential.

The USB port may be used for programming, OS download and PC access.

SM35-J-R20/SM35-J-T20

This series comprises a build-in RS232 port.

Caution
- Signals are related to the controller's 0V; the same 0V is used by the power supply.
- The serial port is not isolated. If the controller is used with a non-isolated external device, avoid potential voltage that exceeds ± 10V.

Use RS232 to download programs from a PC, and to communicate with serial devices and applications, such as SCADA.

Pinouts

The pinouts below show the PLC port signals.

RS232	
Pin #	Description
1	Not connected
2	0V reference
3	TXD signal
4	RXD signal
5	0V reference
6	Not connected

Opening the Controller

⚠
- Before performing these actions, touch a grounded object to discharge any electrostatic charge.
- Avoid touching the PCB board directly. Hold the PCB board by its connectors.

1. Turn off the power supply, disconnects, and dismounts the controller.
2. The back cover of the controller comprises 4 screws, located in the corners. Remove the screws, and pull off the back cover.

Changing I/O Settings

The I/O board of the controller is now exposed, enabling you to change I/O settings (module dependent) according to the jumpers setting above.

Note: Photo is for illustration purposes only. (Using SM70)

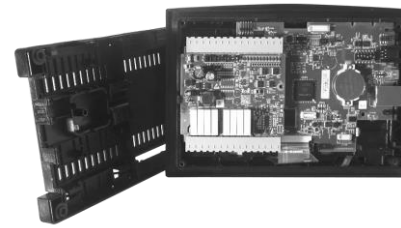

Closing the Controller

Replace the back cover of the controller and fasten the corner screws.

Note that you must replace the back cover securely before powering up the controller.

Samba™ PLC+HMI™

SM35-J-R20
SM43-J-R20
SM70-J-R20
Technical Specifications

Power Supply

Item	SM35-J-R20	SM43-J-R20	SM70-J-R20
Input voltage	24VDC		
Permissible range	20.4VDC to 28.8VDC with less than 10% ripple		
Max. current consumption	See Note 1		
npn inputs	235mA@24VDC	235mA@24VDC	285mA@24VDC
pnp inputs	195mA@24VDC	195mA@24VDC	240mA@24VDC

Notes:

1. To calculate the actual power consumption, subtract the current for each unused element from the maximum current consumption value according to the values below:

	Backlight	Ethernet card	Relay Outputs (per output)
SM35/SM43	20mA	35mA	5mA
SM70	80mA	35mA	5mA

Digital Inputs

Number of inputs	12. See Note 2
Input type	See Note 2
Galvanic isolation	None
Nominal input voltage	24VDC
Input voltage	
pnp (source)	0-5VDC for Logic ‘0’ 17-28.8VDC for Logic ‘1’
npn (sink)	17-28.8VDC for Logic ‘0’ 0-5VDC for Logic ‘1’
Input current	3.7mA@24VDC
Input impedance	6.5KΩ
Response time	10ms typical, when used as normal digital inputs
Input cable length	
Normal digital input	Up to 100 meters
High Speed Input	Up to 50 meters, shielded, see Frequency table below
High speed inputs	Specifications below apply when wired as HSC/shaft-encoder. See Note 2
Frequency (max)	See Note 3

Cable length (max.)	HSC	Shaft-encoder pnp	Shaft-encoder npn
10m	30kHz	20kHz	16kHz
25m	25kHz	12kHz	10kHz
50m	15kHz	7kHz	5kHz

Duty cycle	40-60%
Resolution	32-bit

Notes:

2. This model comprises a total of 12 inputs. Input functionality can be adapted as follows.
   All 12 inputs may be used as digital inputs. They may be wired in a group via a single jumper as either npn or pnp.
   In addition, according to jumper settings and appropriate wiring:
   - Inputs 5 and 6 can function as either digital or analog inputs.
     - If the digital inputs function as npn, analog option is not available.
   - Input 0 can function as a high-speed counter, as part of a shaft-encoder, or as normal digital inputs.
   - Input 1 can function as either counter reset, normal digital input, or as part of a shaft-encoder.
   - If input 0 is set as a high-speed counter (without reset), input 1 can function as a normal digital input.
   - 3. pnp/npn maximum frequency is at 24VDC.

Analog Inputs

Number of inputs	2, according to wiring as described above in Note 2	
Input type	Multi-range inputs: 0-10V, 0-20mA, 4-20mA	
Input range	0-20mA, 4-20mA	0-10VDC
Input impedance	243Ω	>150KΩ
Maximum input rating	25mA, 6V	15V
Galvanic isolation	None	
Conversion method	Successive approximation	
Resolution (except 4-20mA)	10-bit (1024 units)	
Resolution (at 4-20mA)	204 to 1023 (820 units)	
Conversion time	One configured input is updated per scan. See Note 4	
Precision	0.9%	
Status indication	Yes – if an analog input deviates above the permissible range, its value will be 1024.	

Note:

4. For example, if 2 inputs are configured as analog, it takes 2 scans to update all analog values.

Digital Outputs

Number of outputs	8 relay (in 2 groups). See Note 5
Output type	SPST-NO (Form A)
Isolation	By relay
Type of relay	Tyco PCN-124D3MHZ or compatible
Output current (resistive load)	3A maximum per output 8A maximum total per common
Rated voltage	250VAC / 30VDC
Minimum load	1mA, 5VDC
Life expectancy	100k operations at maximum load
Response time	10ms (typical)
Contact protection	External precautions required (see *Increasing Contact Life Span* in the product's Installation Guide)

Note:

5. Outputs 0, 1, 2 and 3 share a common signal. Outputs 4, 5, 6, and 7 share a common signal.

Graphic Display Screen

Item	SM35-J-R20	SM43-J-R20	SM70-J-R20
LCD Type	TFT, LCD display	TFT, LCD display	TFT, LCD display
Illumination backlight	White LED	White LED	White LED
Display resolution	320x240 pixels	480x272 pixels	800x480 pixels
Viewing area	3.5"	4.3"	7"
Colors	65,536 (16-bit)	65,536 (16-bit)	65,536 (16-bit)
Touchscreen	Resistive, analog	Resistive, analog	Resistive, analog
Screen brightness control	Via software (Store value to SI 9, values range: 0 to 100%)		
Virtual Keypad	Displays virtual keyboard when the application requires data entry.		

Program

Item	SM35-J-R20	SM43-J-R20	SM70-J-R20
Memory size			
Application Logic	80B	192K	192K
Images	1.5M	3M	8M
Fonts	320K	320K	512K

Operand type	Quantity	Symbol	Value
Memory Bits	512	MB	Bit (coil)
Memory Integers	256	MI	16-bit signed/unsigned
Long Integers	32	ML	32-bit signed/unsigned
Double Word	32	DW	32-bit unsigned
Memory Floats	24	MF	32-bit signed/unsigned
Fast Bits	64	XB	Fast Bits (coil) – not retained
Fast Integers	32	XI	16 bit signed/unsigned (fast, not retained)
Fast Long Integers	16	XL	32 bit signed/unsigned (fast, not retained)
Fast Double Word	16	XDW	32 bit unsigned (fast, not retained)
Timers	32	T	Res. 10 ms; max 99h, 59 min, 59.99s
Counters	16	C	32-bit

Data Tables	32K dynamic data (recipe parameters, datalogs, etc.) 16K fixed data (read-only data, ingredient names, etc)
HMI displays	Up to 24
Program scan time	15µs per 1kb of typical application

Communication Ports

Port 1	1 channel, RS232 (SM35) , USB device (SM43/SM70)
Galvanic isolation	SM35 and SM43 – No SM70 - Yes
Baud rate	300 to 115200 bps
RS232 **(SM35 only)**	
Input voltage	±20VDC absolute maximum
Cable length	15m maximum (50')
USB device **(SM43,SM70 only)**	
Port type	Mini-B
Specification	USB 2.0 complaint; full speed
Cable	USB 2.0 complaint; up to 3m

Port 2 (optional)	See Note 6
CANbus (optional)	See Note 6

Notes:

6. The user may order and install one or both of the following modules:
   - A serial RS232/RS485 isolated/non-isolated interface module, or an Ethernet Interface module in port 2.
   - A CANbus module
   modules documentation is available on the Unitronics website.

Miscellaneous

Clock (RTC)	Real-time clock functions (date and time)
Battery back-up	7 years typical at 25°C, battery back-up for RTC and system data, including variable data
Battery replacement	Yes. Coin-type 3V, lithium battery, CR2450

Dimensions

Item	SM35-J-R20	SM43-J-R20	SM70-J-R20
Size	109 x 114.1 x 68mm (4.29 x 4.49 x 2.67”). See Note 7	136 x 105.1 x 61.3mm (5.35 x 4.13 x 2.41”). See Note 7	210 x 146.4 x 42.3mm (8.26 x 5.76 x 1.66”). See Note 7
Weight	210g (7.4 oz)	350g (12.34 oz)	640g (22.57 oz)

Notes:

7. For exact dimensions, refer to the product’s Installation Guide.

Mounting method

Item	SM35-J-R20	SM43-J-R20	SM70-J-R20
Panel mounted	IP65/66/NEMA4X	IP65/66/NEMA4X	IP65/66/NEMA4X
DIN-rail mounted	IP20/NEMA1	-	-

Environment

Operational temperature	0 to 50ºC (32 to 122ºF)
Storage temperature	-20 to 60ºC (-4 to 140ºF)
Relative Humidity (RH)	10% to 95% (non-condensing)
Operating Altitude	2000m (6562 ft)
Shock	IEC 60068-2-27, 15G, 11ms duration
Vibration	IEC 60068-2-6, 5Hz to 8.4Hz, 3.5mm constant amplitude, 8.4Hz to 150Hz, 1G acceleration.

Samba™ PLC+HMI™

SM35-J-T20
SM43-J-T20
SM70-J-T20
Technical Specifications

Power Supply

Item	SM35-J-T20	SM43-J-T20	SM70-J-T20
Input voltage	24VDC		
Permissible range	20.4VDC to 28.8VDC with less than 10% ripple		
Max. current consumption	See Note 1		
npn inputs	215mA@24VDC	215mA@24VDC	340mA@24VDC
pnp inputs	120mA@24VDC	120mA@24VDC	240mA@24VDC

Notes:

1. To calculate the actual power consumption, subtract the current for each unused element from the maximum current consumption value according to the values below:

	Backlight	Ethernet card
SM35/SM43	20mA	35mA
SM70	80mA	35mA

Digital Inputs

Number of inputs	12. See Note 2
Input type	See Note 2
Galvanic isolation	None
Nominal input voltage	24VDC
Input voltage	
pnp (source)	0-5VDC for Logic ‘0’ 17-28.8VDC for Logic ‘1’
npn (sink)	17-28.8VDC for Logic ‘0’ 0-5VDC for Logic ‘1’
Input current	8mA@24VDC
Input impedance	3KΩ
Response time	10ms typical, when used as normal digital inputs
Input cable length	
Normal digital input	Up to 100 meters
High Speed Input	Up to 50 meters, shielded, see Frequency table below

High speed inputs — Specifications below apply when wired as HSC/shaft-encoder. See Note 2

Frequency (max) — See Note 3

Cable length (max.)	HSC	Shaft-encoder
10m	30kHz	20kHz
25m	30kHz	13kHz
50m	25kHz	9kHz

Duty cycle	40-60%
Resolution	32-bit

Notes:

2. This model comprises a total of 12 inputs. Input functionality can be adapted as follows:
   12 inputs may be used as digital inputs. They may be wired, in a group, and set to either npn or pnp via a single jumper.
   In addition, according to jumper settings and appropriate wiring:
   - Inputs 10 and 11 can function as either digital or analog inputs.
   - Inputs 0, 2, and 4 can function as high-speed counters, as part of a shaft-encoder, or as normal digital inputs.
   - Inputs 1, 3, and 5 can function as either counter reset, as part of a shaft-encoder, or as normal digital inputs.
   - If inputs 0, 2, 4 are set as high-speed counters (without reset), inputs 1, 3, 5 can function as normal digital inputs.
3. pnp/npn maximum frequency is at 24VDC.

Analog Inputs

Number of inputs	2, according to wiring as described above in Note 2	
Input type	Multi-range inputs: 0-10V, 0-20mA, 4-20mA	
Input range	0-20mA, 4-20mA	0-10VDC
Input impedance	243Ω	>150KΩ
Maximum input rating	25mA, 6V	15V
Galvanic isolation	None	
Conversion method	Successive approximation	
Resolution (except 4-20mA)	10-bit (1024 units)	
Resolution (at 4-20mA)	204 to 1023 (820 units)	
Conversion time	One configured input is updated per scan. See Note 4	
Precision	0.9%	
Status indication	Yes – if an analog input deviates above the permissible range, its value will be 1024.	

Note:

4. For example, if 2 inputs are configured as analog, it takes 2 scans to update all analog values.

Digital Outputs

Number of outputs	8 transistor pnp (source)
Output type	P-MOSFET (open drain)
Isolation	None
Output current (resistive load)	0.5A maximum per output 3A maximum total per common
Maximum frequency	50Hz (resistive load) 0.5Hz (inductive load)
PWM maximum frequency	0.5KHz (resistive load). See Note 5
Short circuit protection	Yes
Short circuit indication	Via software
On voltage drop	0.5VDC maximum
Power supply for outputs	
Operating voltage	20.4 to 28.8VDC
Nominal voltage	24VDC

Note:

5. Outputs 0 to 6 can be used as PWM outputs.

Graphic Display Screen

Item	SM35-J-T20	SM43-J-T20	SM70-J-T20
LCD Type	TFT, LCD display	TFT, LCD display	TFT, LCD display
Illumination backlight	White LED	White LED	White LED
Display resolution	320x240 pixels	480x272 pixels	800x480 pixels
Viewing area	3.5"	4.3"	7"
Colors	65,536 (16-bit)	65,536 (16-bit)	65,536 (16-bit)
Touchscreen	Resistive, analog	Resistive, analog	Resistive, analog
Screen brightness control	Via software (Store value to SI 9, values range: 0 to 100%)		
Virtual Keypad	Displays virtual keyboard when the application requires data entry.		

Program

Item	SM35-J-T20	SM43-J-T20	SM70-J-T20
Memory size			
Application Logic	80K	192K	192K
Images	1.5M	3M	8M
Fonts	320K	320K	512K

Operand type	Quantity	Symbol	Value
Memory Bits	512	MB	Bit (coil)
Memory Integers	256	MI	16-bit signed/unsigned
Long Integers	32	ML	32-bit signed/unsigned
Double Word	32	DW	32-bit unsigned
Memory Floats	24	MF	32-bit signed/unsigned
Fast Bits	64	XB	Fast Bits (coil) – not retained
Fast Integers	32	XI	16 bit signed/unsigned (fast, not retained)
Fast Long Integers	16	XL	32 bit signed/unsigned (fast, not retained)
Fast Double Word	16	XDW	32 bit unsigned (fast, not retained)
Timers	32	T	Res. 10 ms; max 99h, 59 min, 59.99s
Counters	16	C	32-bit

Data Tables	32K dynamic data (recipe parameters, datalogs, etc.) 16K fixed data (read-only data, ingredient names, etc)
HMI displays	Up to 24
Program scan time	15µs per 1kb of typical application

Communication Ports

Port 1	1 channel, RS232 (SM35) , USB device (SM43/SM70)
Galvanic isolation	SM35 and SM43 – No SM70 - Yes
Baud rate	300 to 115200 bps
RS232 **(SM35 only)**	
Input voltage	±20VDC absolute maximum
Cable length	15m maximum (50')
USB device **(SM43,SM70 only)**	
Port type	Mini-B
Specification	USB 2.0 complaint; full speed
Cable	USB 2.0 complaint; up to 3m

Port 2 (optional)	See Note 6
CANbus (optional)	See Note 6

Notes:

6. The user may order and install one or both of the following modules:
   - A serial RS232/RS485 isolated/non-isolated interface module, or an Ethernet Interface module in port 2.
   - A CANbus module
   modules documentation is available on the Unitronics website.

Miscellaneous

Clock (RTC)	Real-time clock functions (date and time)
Battery back-up	7 years typical at 25°C, battery back-up for RTC and system data, including variable data
Battery replacement	Yes. Coin-type 3V, lithium battery, CR2450

Dimensions

Item	SM35-J-T20	SM43-J-T20	SM70-J-T20
Size	109 x 114.1 x 68mm (4.29 x 4.49 x 2.67”). See Note 7	136 x 105.1 x 61.3mm (5.35 x 4.13 x 2.41”). See Note 7	210 x 146.4 x 42.3mm (8.26 x 5.76 x 1.66”). See Note 7
Weight	205g (7.23 oz)	344g (12.13 oz)	633g (22.32 oz)

Notes:

7. For exact dimensions, refer to the product’s Installation Guide.

Mounting method

Item	SM35-J-T20	SM43-J-T20	SM70-J-T20
Panel mounted	IP65/66/NEMA4X	IP65/66/NEMA4X	IP65/66/NEMA4X
DIN-rail mounted	IP20/NEMA1	-	-

Environment

Operational temperature	0 to 50ºC (32 to 122ºF)
Storage temperature	-20 to 60ºC (-4 to 140ºF)
Relative Humidity (RH)	10% to 95% (non-condensing)
Operating Altitude	2000m (6562 ft)
Shock	IEC 60068-2-27, 15G, 11ms duration
Vibration	IEC 60068-2-6, 5Hz to 8.4Hz, 3.5mm constant amplitude, 8.4Hz to 150Hz, 1G acceleration.

The information in this document reflects products at the date of printing. Unitronics reserves the right, subject to all applicable laws, at any time, at its sole discretion, and without notice, to discontinue or change the features, designs, materials and other specifications of its products, and to either permanently or temporarily withdraw any of the forgoing from the market.

All information in this document is provided "as is" without warranty of any kind, either expressed or implied, including but not limited to any implied warranties of merchantability, fitness for a particular purpose, or non-infringement. Unitronics assumes no responsibility for errors or omissions in the information presented in this document. In no event shall Unitronics be liable for any special, incidental, indirect or consequential damages of any kind, or any damages whatsoever arising out of or in connection with the use or performance of this information.

The tradenames, trademarks, logos and service marks presented in this document, including their design, are the property of Unitronics (1989) (R"G) Ltd. or other third parties and you are not permitted to use them without the prior written consent of Unitronics or such third party as may own them.

UG_SM35_43_70_R20_T20.pdf 10/22