# BI10-M30-Y1X-H1141
# Inductive Sensor

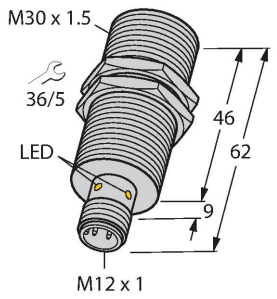


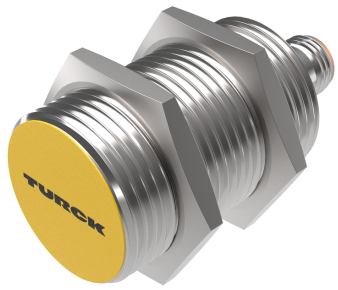

## Technical data

| | |
|---|---|
| Type | BI10-M30-Y1X-H1141 |
| ID | 40202 |
| **General data** | |
| Rated switching distance | 10 mm |
| Mounting conditions | Flush |
| Secured operating distance | ≤ (0.81 × Sn) mm |
| Correction factors | St37 = 1; Al = 0.3; stainless steel = 0.7; Ms = 0.4 |
| Repeat accuracy | ≤ 2 % of full scale |
| Temperature drift | ≤ ±10 % |
| Hysteresis | 1…10 % |
| **Electrical data** | |
| Output function | 2-wire, NAMUR |
| Switching frequency | 0.5 kHz |
| Voltage | Nom. 8.2 VDC |
| Non-actuated current consumption | ≥ 2.1 mA |
| Actuated current consumption | ≤ 1.2 mA |
| Approval acc. to | KEMA 02 ATEX 1090X |
| Internal capacitance ($C_i$)/inductance ($L_i$) | 150 nF/150 µH |
| Device marking | Ex II 1 G Ex ia IIC T6 Ga/II 1 D Ex ia IIIC T135 °C Da |
| | (max. $U_i$ = 20 V, $I_i$ = 20 mA, $P_i$ = 200 mW) |
| **Mechanical data** | |
| Design | Threaded barrel, M30 x 1.5 |
| Dimensions | 62 mm |
| Housing material | Metal, CuZn, Chrome-plated |
| Active area material | Plastic, PA12-GF30 |
| Max. tightening torque of housing nut | 75 Nm |

## Features

- M30 × 1.5 threaded tube
- Chrome-plated brass
- DC 2-wire, nom. 8.2 VDC
- Output acc. to DIN EN 60947-5-6 (NAMUR)
- M12 x 1 male connector
- ATEX category II 1 G, Ex zone 0
- ATEX category II 1 D, Ex zone 20
- SIL2 (Low Demand Mode) acc. to IEC 61508, PL c acc. to ISO 13849-1 with HFT0
- SIL3 (All Demand Mode) acc. to IEC 61508, PL e acc. to ISO 13849-1 with redundant configuration HFT1

## Wiring diagram

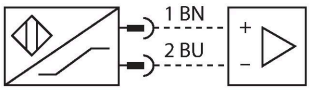


## Functional principle

Inductive sensors detect metal objects contactless and wear-free. For this, they use a high-frequency electromagnetic AC field that interacts with the target. Inductive sensors generate this field via an RLC circuit with a ferrite coil.

BI10-M30-Y1X-H1141| 07-11-2023 20-29 | Technical modifications reserved

## Technical data

| | |
|---|---|
| Electrical connection | Connector, M12 × 1 |
| **Environmental conditions** | |
| Ambient temperature | -25…+70 °C |
| Vibration resistance | 55 Hz (1 mm) |
| Shock resistance | 30 g (11 ms) |
| Protection class | IP67 |
| MTTF | 6198 years acc. to SN 29500 (Ed. 99) 40 °C |
| Switching state | LED, Yellow |

## Mounting instructions

Mounting instructions/Description

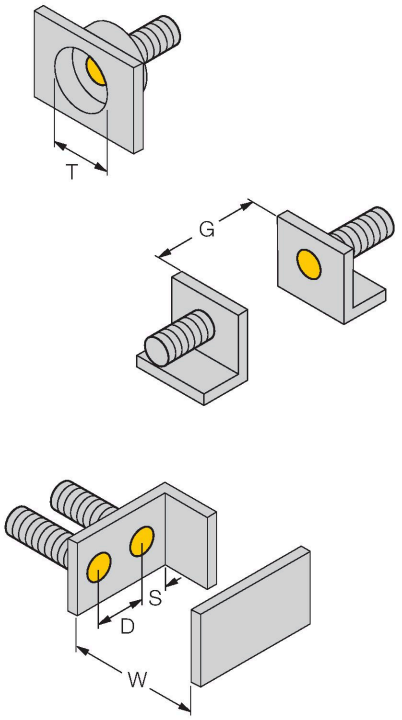


| | |
|---|---|
| Distance D | 2 x B |
| Distance W | 3 x Sn |
| Distance T | 3 x B |
| Distance S | 1.5 x B |
| Distance G | 6 x Sn |
| Diameter active area B | Ø 30 mm |

## Accessories

| BST-30B | 6947216 |
|---|---|

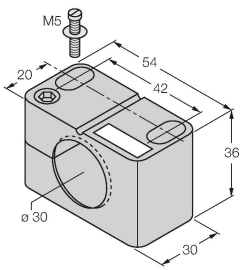


Mounting clamp for threaded barrel sensors, with dead-stop; material: PA6

| QM-30 | 6945103 |
|---|---|

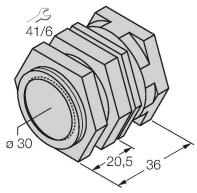


Quick-mount bracket with dead-stop; material: Chrome-plated brass. Male thread M36 × 1.5. Note: The switching distance of the proximity switches may change when using quick-mount brackets.

BI10-M30-Y1X-H1141| 07-11-2023 20-29 | Technical modifications reserved

| MW-30 | 6945005 |
|---|---|

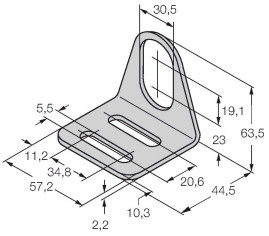


Mounting bracket for threaded barrel sensors; material: Stainless steel A2 1.4301 (AISI 304)

| BSS-30 | 6901319 |
|---|---|

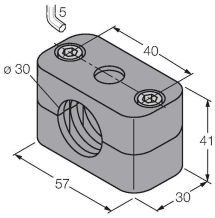


Mounting clamp for smooth and threaded barrel sensors; material: Polypropylene

## Accessories

| Dimension drawing | Type | ID | |
|---|---|---|---|
| | RKC4.221T-2/TEB | 6628420 | Connection cable, M12 female connector, straight, 2-pin, cable length: 2 m, jacket material: PVC, blue; cULus approval |
| 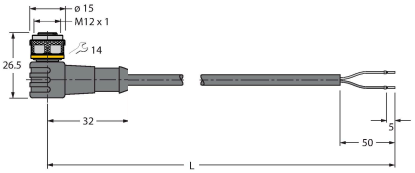 | WKC4.221T-2/TEB | 6628427 | Connection cable, M12 female connector, angled, 2-pin, cable length: 2 m, jacket material: PVC, blue; cULus approval |

## Accessories

| Dimension drawing | Type | ID | |
|---|---|---|---|
| 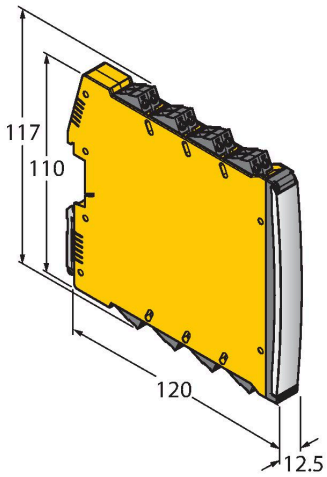 | IMX12-DI01-2S-2T-0/24VDC | 7580020 | Isolating switching amplifier, 2-channel; SIL2 acc. to IEC 61508; Ex-proof version; 2 transistor outputs; input Namur signal; ON/OFF switchable monitoring of wire-break and short-circuit; toggle between NO/NC mode; signal doubling; removable screw terminals; 12.5 mm wide; 24 VDC power supply |

BI10-M30-Y1X-H1141| 07-11-2023 20-29 | Technical modifications reserved

## Instructions for use

| | |
|---|---|
| Intended use | This device fulfills Directive 2014/34/EC and is suited for use in explosion-hazardous areas according to EN 60079-0:2018 and EN 60079-11:2012.It is also suitable for use in safety-related systems, including SIL2 (IEC 61508) and PL c (ISO 13849-1) with HFT0 and SIL3 (IEC 61508) and PL e (ISO 13849-1) with redundant configuration HFT1In order to ensure that the device is operated as intended, the national regulations and directives must be observed. |
| For use in explosion hazardous areas conform to classification | II 1 G and II 1 D (Group II, Category 1 G, electrical equipment for gaseous atmospheres and category 1 D, electrical equipment for dust atmospheres). |
| Marking (see device or technical data sheet) | Ex II 1 G and Ex ia IIC T6 Ga and Ex II 1 D Ex ia IIIC T135 °C Da acc. to EN 60079-0, -11 |
| Local admissible ambient temperature | -25…+70 °C |
| Installation/Commissioning | These devices may only be installed, connected and operated by trained and qualified staff. Qualified staff must have knowledge of protection classes, directives and regulations concerning electrical equipment designed for use in explosion hazardous areas.Please verify that the classification and the marking on the device comply with the actual application conditions. |
| | This device is only suited for connection to approved Exi circuits according to EN 60079-0 and EN 60079-11. Please observe the maximum admissible electrical values.After connection to other circuits the sensor may no longer be used in Exi installations. When interconnected to (associated) electrical equipment, it is required to perform the "Proof of intrinsic safety" (EN60079-14).Attention! When used in safety systems, all content of the security manual must be observed. |
| Installation and mounting instructions | Avoid static charging of cables and plastic devices. Please only clean the device with a damp cloth. Do not install the device in a dust flow and avoid build-up of dust deposits on the device.If the devices and the cable could be subject to mechanical damage, they must be protected accordingly. They must also be shielded against strong electro-magnetic fields.The pin configuration and the electrical specifications can be taken from the device marking or the technical data sheet. |
| Service/Maintenance | Repairs are not possible. The approval expires if the device is repaired or modified by a person other than the manufacturer. The most important data from the approval are listed. |

BI10-M30-Y1X-H1141| 07-11-2023 20-29 | Technical modifications reserved