RKC5T-1-RSC5T/TXY
Actuator and Sensor Cable, PUR – Extension Cable

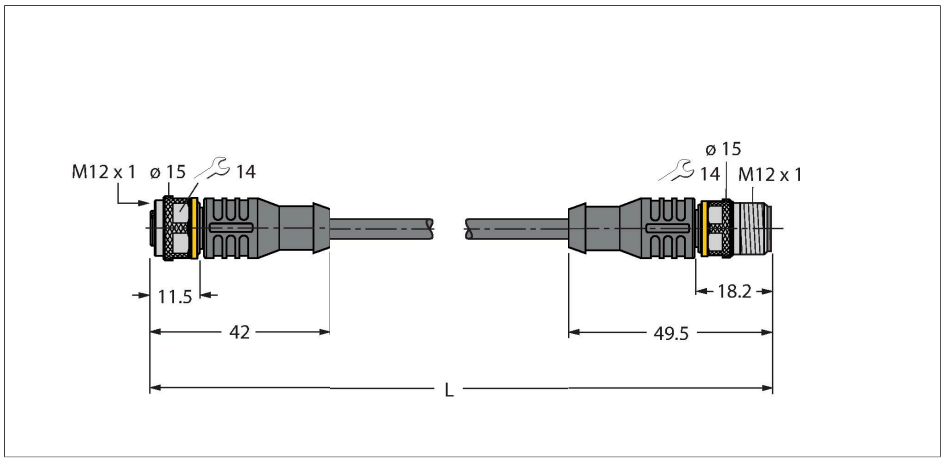

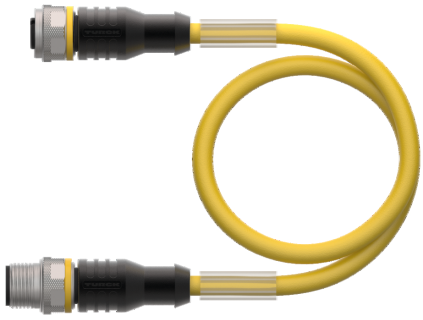

Technical data

Type	RKC5T-1-RSC5T/TXY
ID	6629783
Remark to product	!!! Pin 5 = PE !!!
Connector A	Female, M12 × 1, Straight, A-coded
Number of Pins	4+PE
Contacts	Brass, CuZn, Gold-plated
Contact carriers	Plastic, TPU, Black
Connector body	Plastic, TPU, Black
Coupling nut/screw	Brass, CuZn, Nickel-plated
Seal	Plastic, FPM/FKM
Mechanical lifespan	> 100 Mating cycles
Pollution degree	3
Protection class	IP67, IP69K, Only in screwed condition
Connector B	Male, M12 × 1, Straight, A-coded
Number of pins	4+PE
Contacts	Brass, CuZn, Gold-plated
Contact carriers	Plastic, TPU, Black
Connector body	Plastic, TPU, Black
Coupling nut/retaining screw	Brass, CuZn, Nickel-plated
Mechanical life	> 100 Mating cycles
Pollution degree	3
Protection class	IP67, IP69K, Only when screwed together
Cable	
Cable diameter	Ø 4.8 mm ±0.20
Cable length	1 m
Cable jacket	PUR, Yellow
Core insulation	PP

Features

- Female M12, straight, 4-pin + PE
- Male M12, straight, 4-pin + PE
- Jacket material: PUR
- Jacket color: yellow
- Suitable for drag chain use
- Resistant to chemicals, UV radiation and oils
- Flame retardant (FT2 acc. to UL 1581, IEC 60332-2-2)
- Resistant to welding sparks
- Free from halogen, silicone, PVC and LABS
- Particularly resistant to abrasion
- Protection class: IP67, IP69K
- Cable length: 1.0 m

Cable Cross-Section

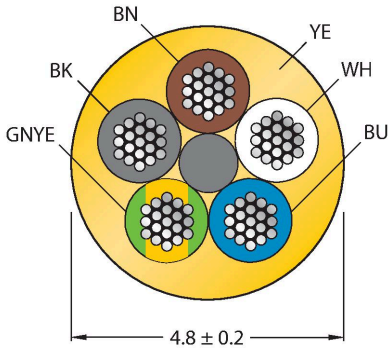

Contact assignment

RKC5T-1-RSC5T/TXY| 12-11-2023 18-42 | Technical modifications reserved

Technical data

Core cross-section	5 x 0.34 mm²
Arrangement of strands	42 x 0.1 mm
Core colors	BN, WH, BU, BK, GNYE
Electrical properties at +20 °C	
Rated voltage	60 V
Test voltage	2000 V
Current	4 A
Insulation resistance	> 30.5 MΩ/km
forward resistance	max. 57 Ω/km
Mechanical and chemical properties	
Bending radius (stationary installation)	≥ 5 x Ø
Bending radius (flexible use)	≥ 10 x Ø
Bending cycles	≥ 5 million
Admissible acceleration	max. 5 m/s²
Admissible travel path, horizontal	5 m (at 5 m/s²)
Admissible travel path, vertical	2 m (at 5 m/s²)
Admissible traversing speed	3.3 m/s
Torsional stress	± 180 °/m
Ambient temperature range (stationary)	-50…+80 °C
Ambient temperature range (In motion)	-25…+80 °C
Ambient temperature during drag chain operation	-25…+60 °C
Approvals	cULus

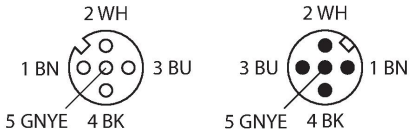

Circuit Diagram

Accessories

TORQUE-WRENCH-SET-AS	6936170

Torque wrench set; handles with adjustable torque 0.4-1.0 Nm, torque wrench for M8 (SW9), fork wrench for M12 (SW 14)

BLANK-LABEL-FOR-CORDSETS-TEL-TXL	6936206

Label for TEL and TXL cables, length: 18 mm, height: 4 mm, material: polycarbonate (PC), color: white, halogen-free and flame-retardant

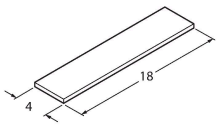

Accessories

Dimension drawing	Type	ID	
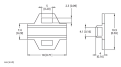	LABEL-HOLDER-FLEX-PVC	100048170	PVC label holder for identification of extension cables (TEL/TXL product series); for cable diameters: min. 5 mm; dimensions 4 × 18 mm; delivery unit: 50 pcs. per package

RKC5T-1-RSC5T/TXY| 12-11-2023 18-42 | Technical modifications reserved