BI5-Q08-AP6X2-V1131/S34
Inductive Sensor – Resistant to Magnetic Fields

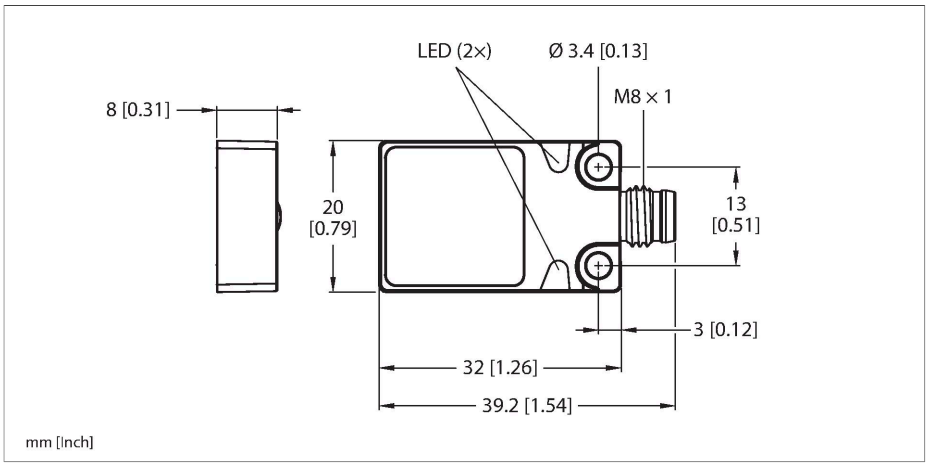

Technical data

Type	BI5-Q08-AP6X2-V1131/S34
ID	1600501
Special version	S34 corresponds to: Resistant to magnetic fields
General data	
Rated switching distance	5 mm
Mounting conditions	Flush
Secured operating distance	≤ (0.81 × Sn) mm
Correction factors	St37 = 1; Al = 0.3; stainless steel = 0.7; Ms = 0.4
Repeat accuracy	≤ 2 % of full scale
Temperature drift	≤ ±10 %
Hysteresis	3…15 %
Electrical data	
Operating voltage	10…30 VDC
Residual ripple	≤ 10 % U_{ss}
DC rated operational current	≤ 200 mA
No-load current	15 mA
Residual current	≤ 0.1 mA
Isolation test voltage	≤ 0.5 kV
Short-circuit protection	yes / Cyclic
Voltage drop at I_e	≤ 1.8 V
Wire breakage/Reverse polarity protection	yes / Complete
Output function	3-wire, NO contact, PNP
Switching frequency	0.03 kHz
Mechanical data	
Design	Rectangular, Q08

Features

- Rectangular, height 8 mm
- Active face on top
- Metal, Zamak, nickel-plated
- Resistant to magnetic fields (weld resistant), for DC and AC fields
- DC 3-wire, 10…30 VDC
- NO contact, PNP output
- Male connector M8 × 1/Ø 8 mm

Wiring diagram

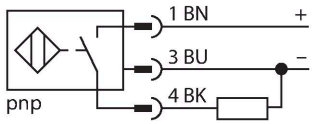

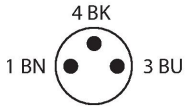

Functional principle

Inductive sensors detect metal objects contactless and wear-free. For this, they use a high-frequency electromagnetic AC field that interacts with the target. Inductive sensors generate this field via an RLC circuit with a ferrite coil.

BI5-Q08-AP6X2-V1131/S34| 07-11-2023 20-09 | Technical modifications reserved

Technical data

Dimensions	32 x 20 x 8 mm
Housing material	Metal, Zamak, Nickel Plated
Active area material	Plastic, PP, yellow
Electrical connection	Connector, M8 × 1/Ø 8 mm
Environmental conditions	
Ambient temperature	-25…+70 °C
Vibration resistance	55 Hz (1 mm)
Shock resistance	30 g (11 ms)
Protection class	IP67
MTTF	2283 years acc. to SN 29500 (Ed. 99) 40 °C
Power-on indication	LED, Green
Switching state	LED, Yellow

Mounting instructions

Mounting instructions/Description

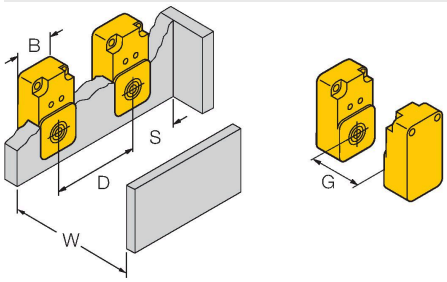

Distance D	40 mm
Distance W	24 mm
Distance S	1 × B
Distance G	48 mm
Width active area B	20 mm

Accessories

Dimension drawing	Type	ID	
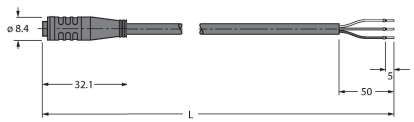	PKG3S-2/TEL	6627330	Connection cable, Ø 8-mm female connector, snap-on, straight, 3-pin, cable length: 2 m, jacket material: PVC, black; cULus approval

BI5-Q08-AP6X2-V1131/S34| 07-11-2023 20-09 | Technical modifications reserved